REMOVE BURRS - BREAK ALL CORNERS - IF IN DOUBT ASK

DO NOT SCALE

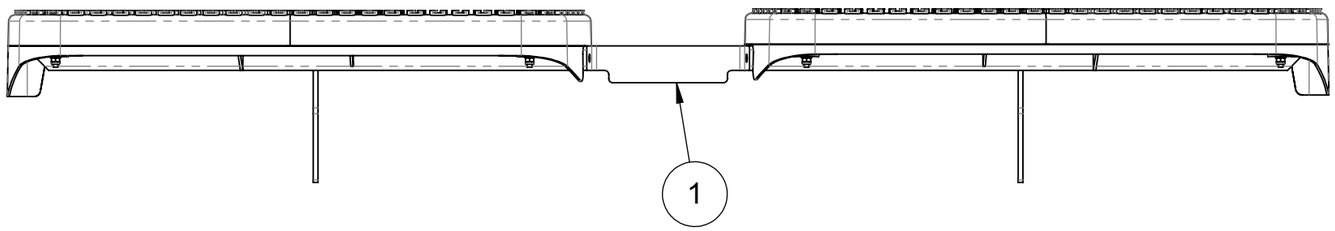

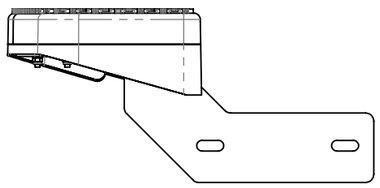

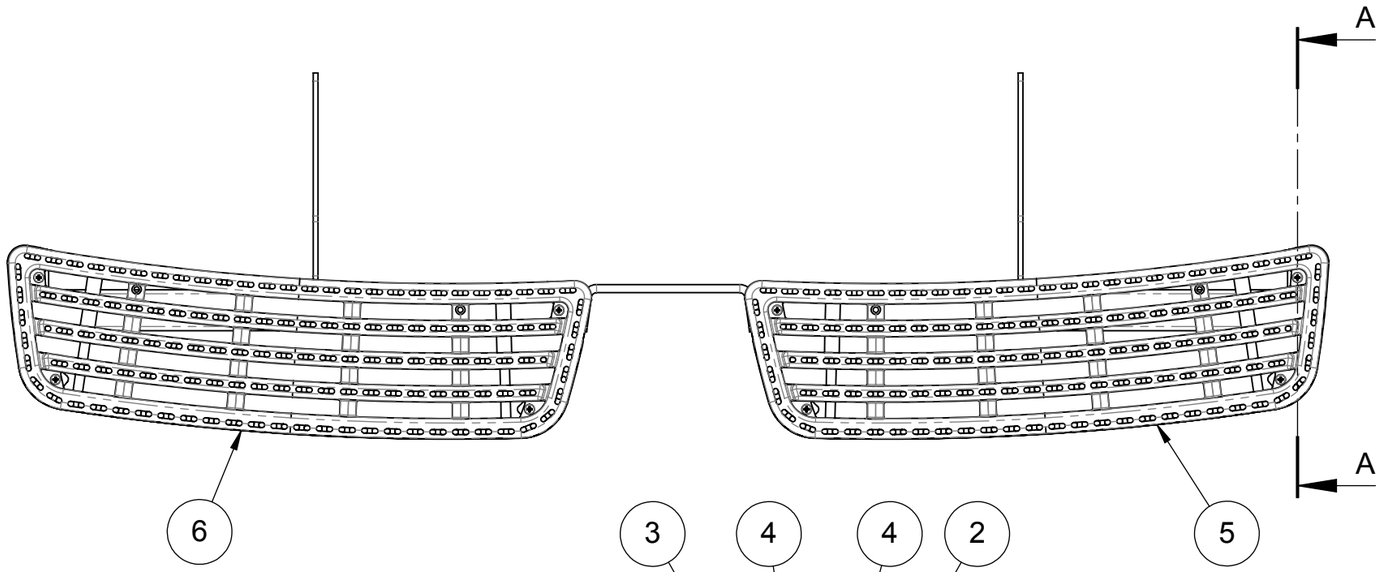

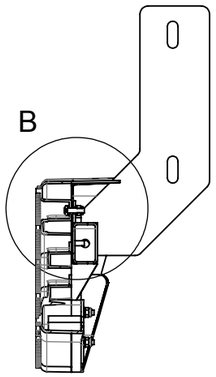

SECTION A-A

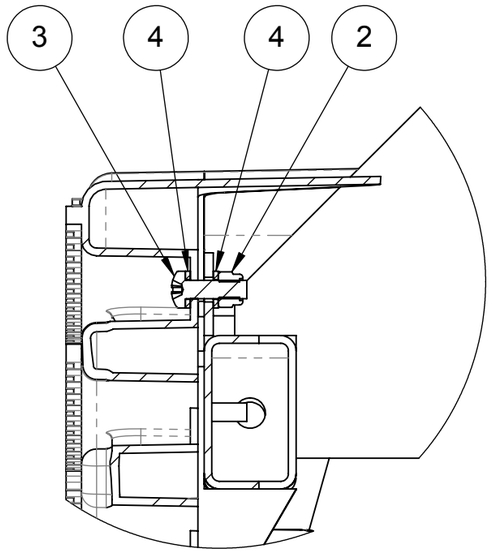

DETAIL B
SCALE 1 : 2

ITEM NO.	PART NUMBER	DESCRIPTION	QTY.
6	STEP_TREAD_NS_YELLOW	STEP TREAD, NS (UK)	1
5	STEP_TREAD_OS_YELLOW	STEP TREAD, OS (UK)	1
4	ISO 7089 - 6	WASHER, M6 PLAIN (A)	14
3	ISO 7045 - M6 x 20	SCREW, M6 x 20 PAN CROSS BZP	8
2	ISO 7040-M6-N	NUT, M6 NYLOC BZP	6
1	A10025	SUBFRAME	1

REV.	DESCRIPTION	DATE
E		
D		
C		
B		
A	INITIAL ISSUE	15.JUL.15

UNLESS OTHERWISE SPECIFIED:
DIMENSIONS ARE IN MILLIMETERS
SURFACE FINISH:
TOLERANCES:
LINEAR:
ANGULAR:

FINISH: TO SPEC.

FINISH COLOUR:

	INITIALS	DATE	CLIENT
DRAWN	JJE	15.JUL.15	STANDARD/STOCK
CHK'D			PROJECT
APP'D			PCT MR4130A TOWBAR FITTING
MFG			

MATERIAL:
MAT'L SPEC:

WEIGHT: 13.21 Kg

DO NOT SCALE DRAWING

REVISION: A

AXIOM LTD
UNIT 4 CALDER COURT - ALTHAM BUS. PK. - LANCS - BB5 5YB
01282 779143 - AXIOMLTD@AOL.COM

TITLE:

GENERAL ARRANGEMENT
DOUBLE TREAD TOW STEP

DWG NO. GA10025

QTY. OFF

A3

SCALE: 1:7.5

STATUS:

SHEET 1 OF 2

REMOVE BURRS - BREAK ALL CORNERS - IF IN DOUBT ASK

DO NOT SCALE

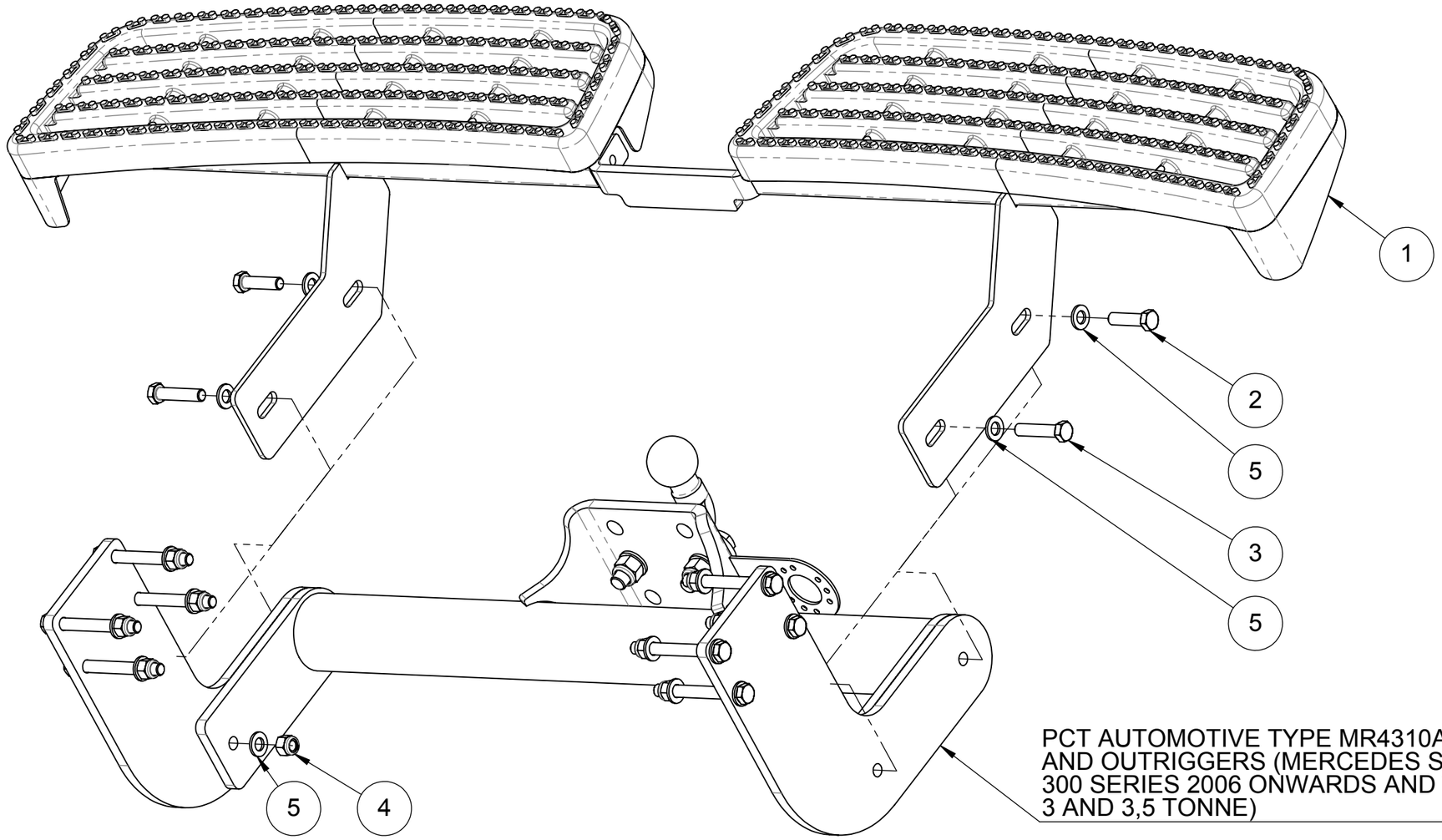

PCT AUTOMOTIVE TYPE MR4310A TOWBAR AND OUTRIGGERS (MERCEDES SPRINTER 300 SERIES 2006 ONWARDS AND VW CRAFTER 3 AND 3,5 TONNE)

FITTING INSTRUCTIONS.

FIT OUTRIGGERS TO VEHICLE CHASSIS IN ACCORDANCE WITH TOWBAR MANUFACTURER'S INSTRUCTIONS. DO NOT FULLY TIGHTEN FASTENERS

WITH THE HELP OF AN ASSISTANT, USE A TROLLEY JACK OR PALLET TRUCK TO OFFER THE TOWBAR UP TO THE OUTRIGGERS. DO NOT INSERT FASTENERS AT THIS POINT.

OFFER THE STEP ASSEMBLY UP TO THE TOWBAR/OUTRIGGER ASSEMBLY. INSERT 2 OFF M12 x 45 SCREWS AND WASHERS (2 AND 5) INTO THE REARMOST MOUNTING HOLES. FIT 2 OFF M12 x 55 SCREWS, WASHERS AND NYLOC NUTS (3, 4 AND 5) INTO THE FORWARD MOUNTING HOLES.

REMOVE JACK/PALLET TRUCK AND TIGHTEN ALL FASTENERS TO SPECIFICATION. REFER TO TOWBAR MANUFACTURER FOR TORQUE FIGURES RELATING TO TOWBAR AND OUTRIGGERS.

ITEM NO.	PART NUMBER	DESCRIPTION	QTY.
5	ISO 7089 - 12	WASHER, M12 PLAIN (A)	6
4	ISO 7040-M12-N	NUT, M12 NYLOC BZP	2
3	ISO 4017 - M12 x 55-N	SCREW, M12 x 55 HEX BZP	2
2	ISO 4017 - M12 x 45-N	SCREW, M12 x 45 HEX BZP	2
1	GA10025	STEP ASSEMBLY	1

REV.	DESCRIPTION	DATE
E		
D		
C		
B		
A	INITIAL ISSUE	15.JUL.15

UNLESS OTHERWISE SPECIFIED:
DIMENSIONS ARE IN MILLIMETERS
SURFACE FINISH:
TOLERANCES:
LINEAR:
ANGULAR:

FINISH: TO SPEC.

FINISH COLOUR:

DO NOT SCALE DRAWING

REVISION: A

AXIOM LTD
UNIT 4 CALDER COURT - ALTHAM BUS. PK. - LANCS - BB5 5YB
01282 779143 - AXIOMLTD@AOL.COM

	INITIALS	*DATE*	*CLIENT*
DRAWN	JJE	15.JUL.15	STANDARD/STOCK
CHK'D			*PROJECT*
APP'D			PCT MR4130A TOWBAR FITTING
MFG			

TITLE:

GENERAL ARRANGEMENT
DOUBLE TREAD TOW STEP

MATERIAL:

MAT'L SPEC:

DWG NO. GA10025

QTY. OFF

A3

WEIGHT: 39.06 Kg

SCALE: 1:5

STATUS:

SHEET 2 OF 2